Dylan Thornburg

Santa Clara University	ELEN 164 Winter 2026	Shoba Krishnan
Laboratory #7- Part 2: Switching Regulator – non ideal behavior		

I. Objectives

- To simulate a switching regulator.
- To simulate and observe differences in real vs. ideal components

II. Laboratory procedure

Non-Ideal Circuit Simulations

Recalling the ideal schematic

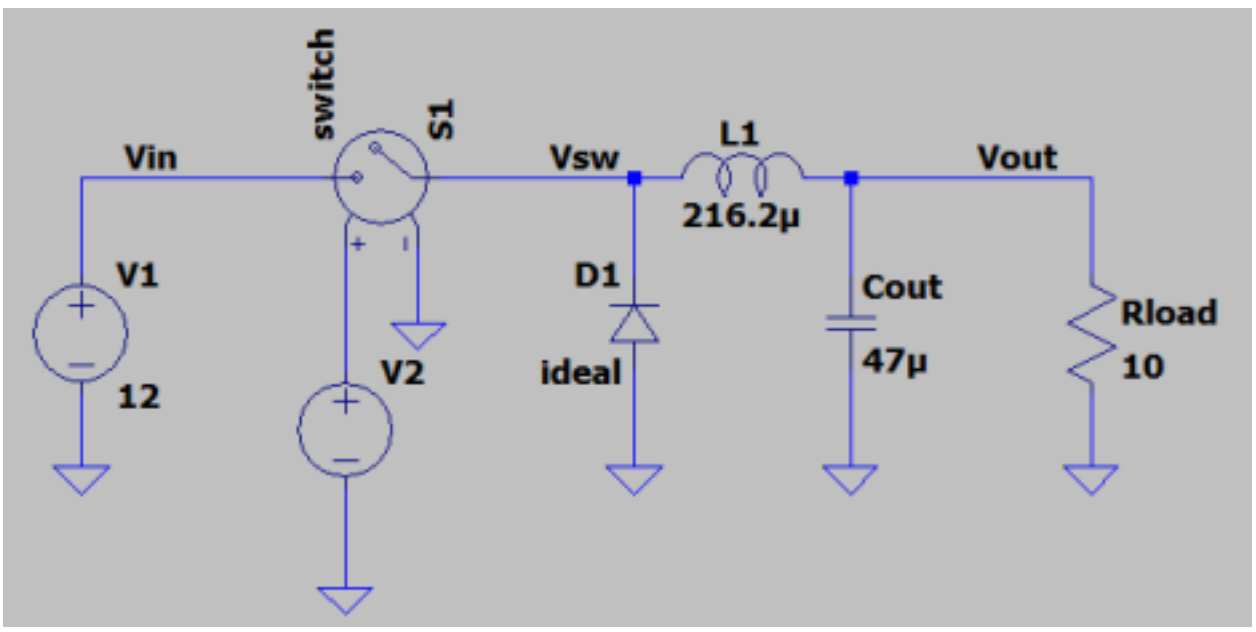

Figure 1. Ideal Buck Converter

Section 1: Setting-up the Non-Ideal Circuit

In this section we will study the operation of buck converters introduce real components. This implies consideration of parameters and parasitics such as switch resistance, diode forward voltage drop, capacitor ESR etc.

Save a new copy of the LTSpice Schematic shown in Figure 1 that you used for the ideal simulations, and make the modifications shown in **Figure 2**. You can add in specific components by right-clicking the part you want to change and selecting "Pick a new [Component]." Add in the following parts for our NMOS switch and diode:

MOSFET - IRF7468
Diode - MBRS360

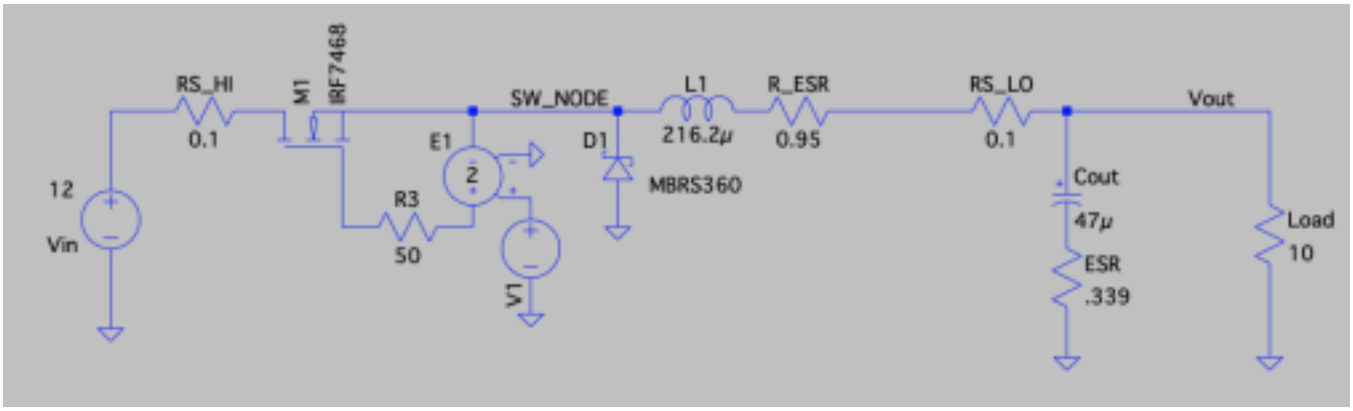

Figure 2. Non-Ideal Buck Converter

A few notes regarding our new schematic:

- This schematic actually represents the buck-convertor test board we are working with.

- The RS_HI and RS_LO resistors are called "shunt resistors." These allow us to measure the current through a wire by reading the voltage across them.
    - **How can we translate the voltage across a shunt resistor to the current in a wire? What sort of precautions should we take when adding a shunt resistor to a circuit? What values should we use?**
      To translate voltage to current, just use Ohms Law V/R=I. When adding shunt resistors, we want them to be small, but they also need to handle a lot of current.

- The component "E1" is a *voltage dependent voltage source.* This component can be found in the component library (Open by using the toolbar or pressing the F2 key) under the name "e".

<u>Section 2: Simulation for Non-Ideal Circuit</u>

Once the correct components are added, we should be ready to simulate. Make sure to keep in the same SPICE Derivatives that we had from the ideal simulations.
They are repeated below for convenience.

Define some initial conditions through SPICE directives:
We want to set the initial output voltage to 0V. This will allow us to see a startup condition, and will give us a known starting point of operation.

a. .ic V(Vout)=0

We also want to set the initial current in the inductor to 0A.

b. .ic I(L1)=0

Definition of the switching conditions

Now that we have our ideal models defined and have set the initial conditions, it is time to describe how we operate the switch. We We are going to accomplish this by operating the V1 source as a voltage pulse.

Let's define those as parameters so we can easily change them for experiments.

d. .param duty=42

e. .param freq=30k

Now that we have our switching parameters, we should be able to setup our switch pulse. Configure V1 as a voltage pulse and add in the following parameters:

f. **Vinital** = 0

g. **Von** = 5

h. **Tdelay**=0

i. **Trise**=1n

j. **Tfall**=1n

k. **Ton**={({duty}/100)/{freq}}

l. **Tperiod**={1/{freq}}

Finally, we just need to define the transient simulation. We should run the transient simulation for ~50ms, and we only need to start saving data after 30ms when the system reaches steady state. Running with a 1us timestep should give plenty of resolution.

<u>1) Switching Characteristics</u>

- In a single plot plane, display the MOSFET drain-source voltage, the gate-source voltage, and the drain current.

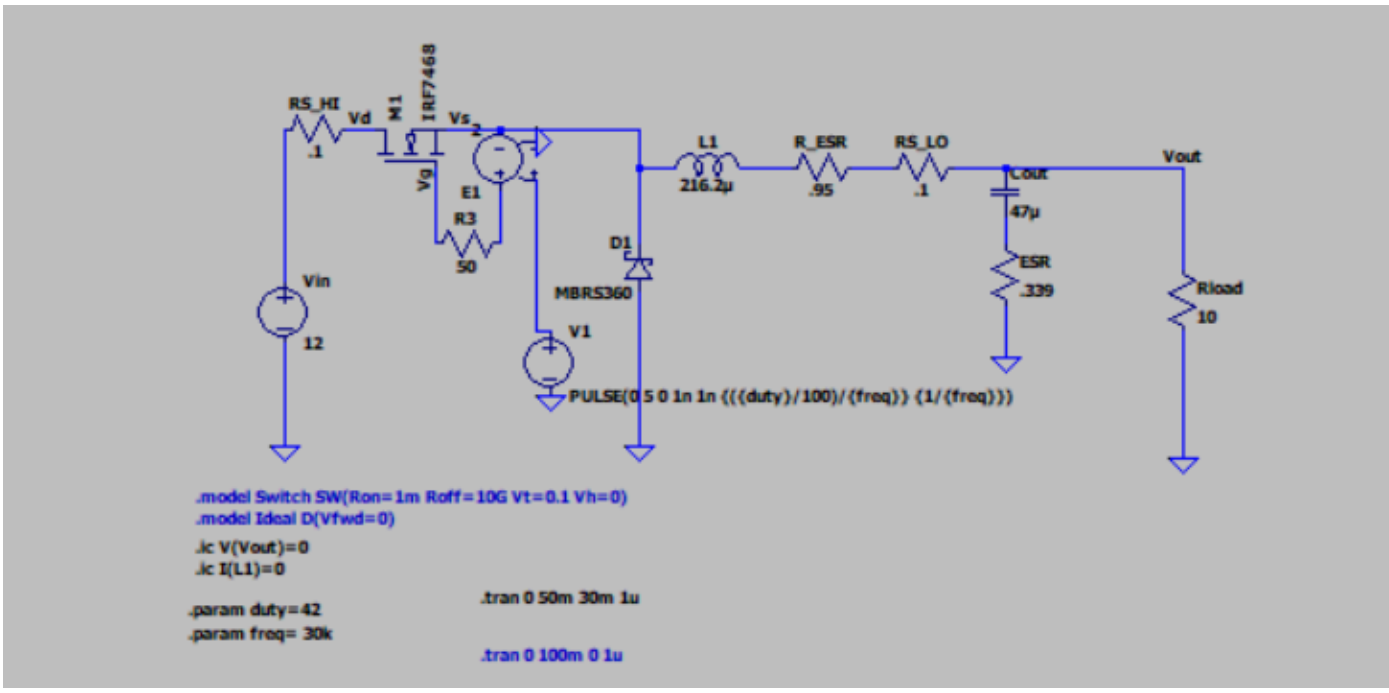

- Zoom in close enough to see the turn-on and turn-off characteristics of the MOSFET.

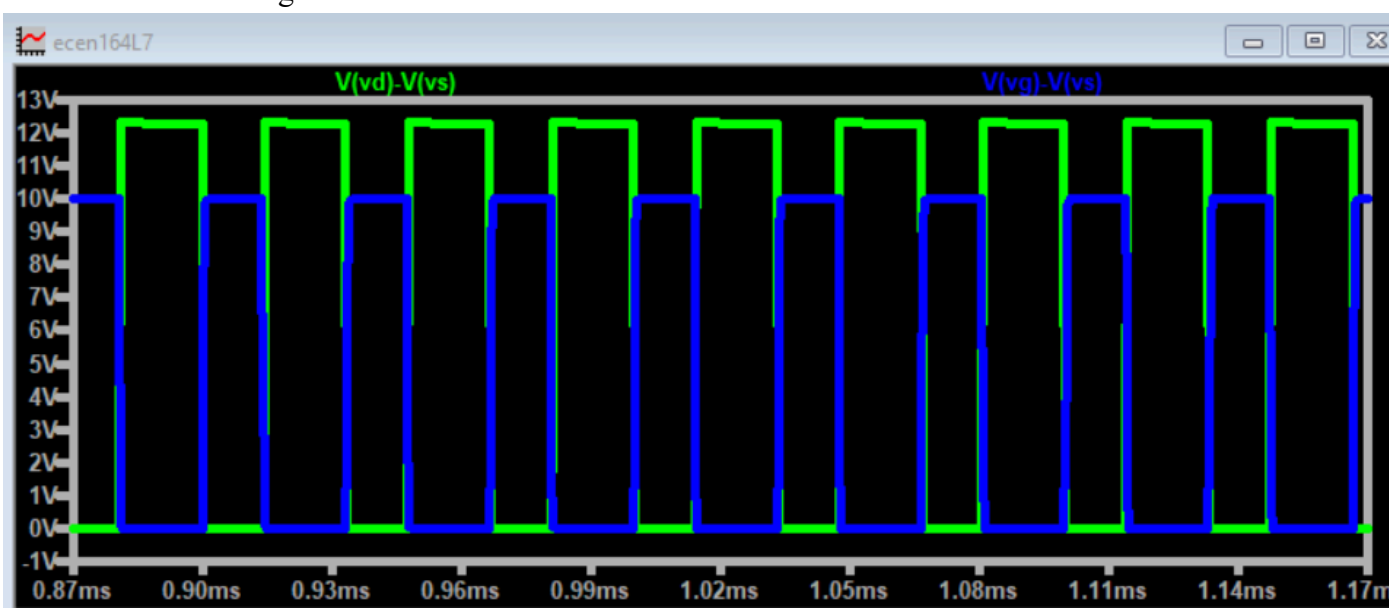

Observations:

- **Record the MOSFET parameters such as rise time, fall time, and delay time.**

Measured:
trise = ~1us
tfall = ~0.8us
Delay time = ~24ns

2) Gate Driver

- In a new plot-plane display the MOSFET gate-source voltage.

● In the same plot-plane graph the MOSFET Gate voltage.

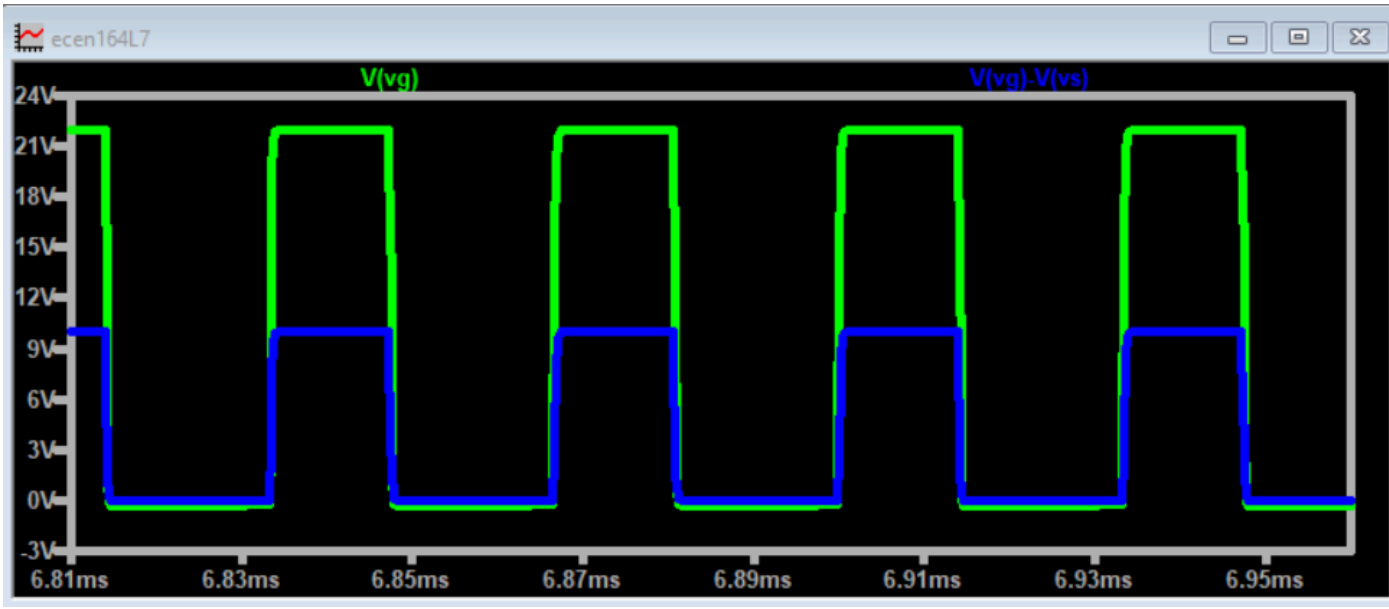

Observations:

● **What is the peak gate voltage?**

Peak gate is ~22V

Peak VGS is 10V

(both expected because gain is multiplying by 2)

● **Why do we need to include the *Voltage Dependent Source* (E1)?**

To create a gain and control the mosfet.

3) Power Loss

● Look at the MOSFET power by observing the current through and the voltage across it.

○ Plot the current and voltage waveforms on separate plot-planes.

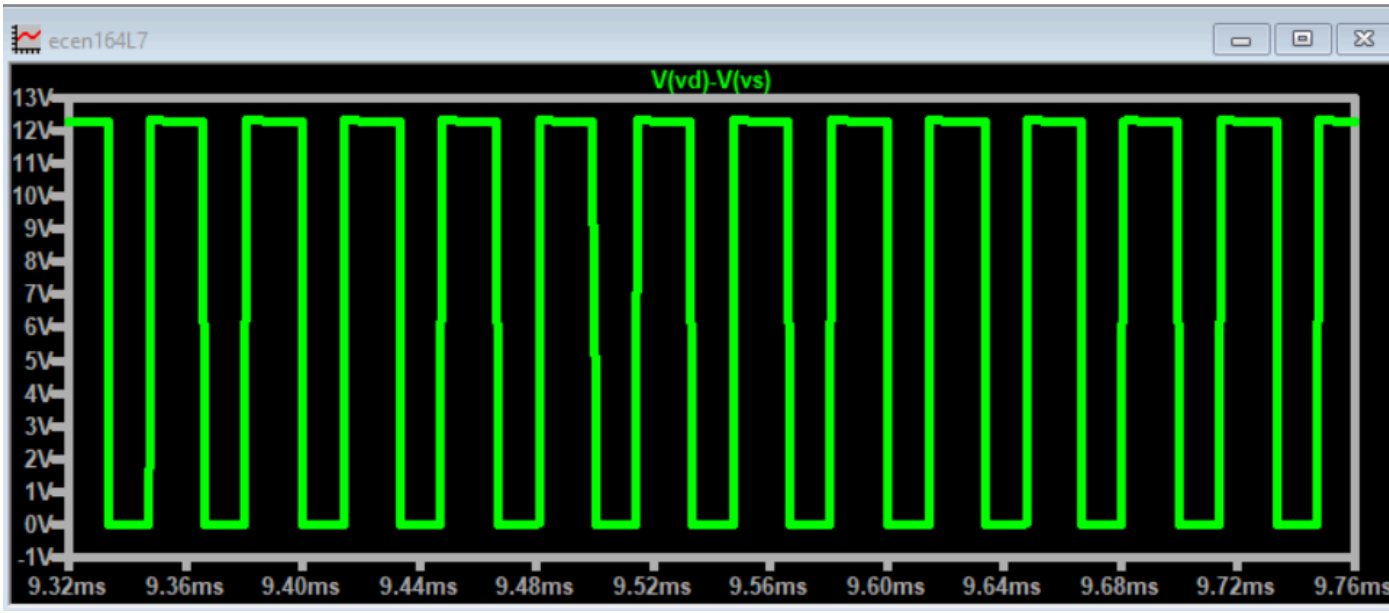

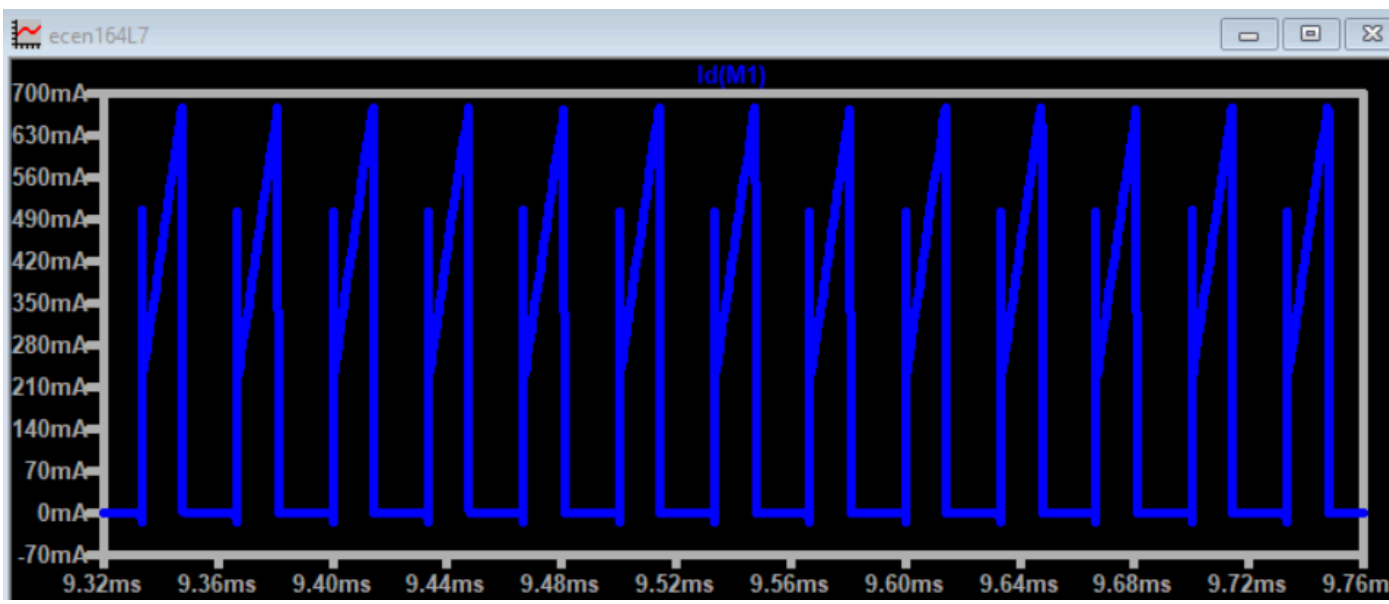

- Use a third plot-plane to graph the product of the two (power)

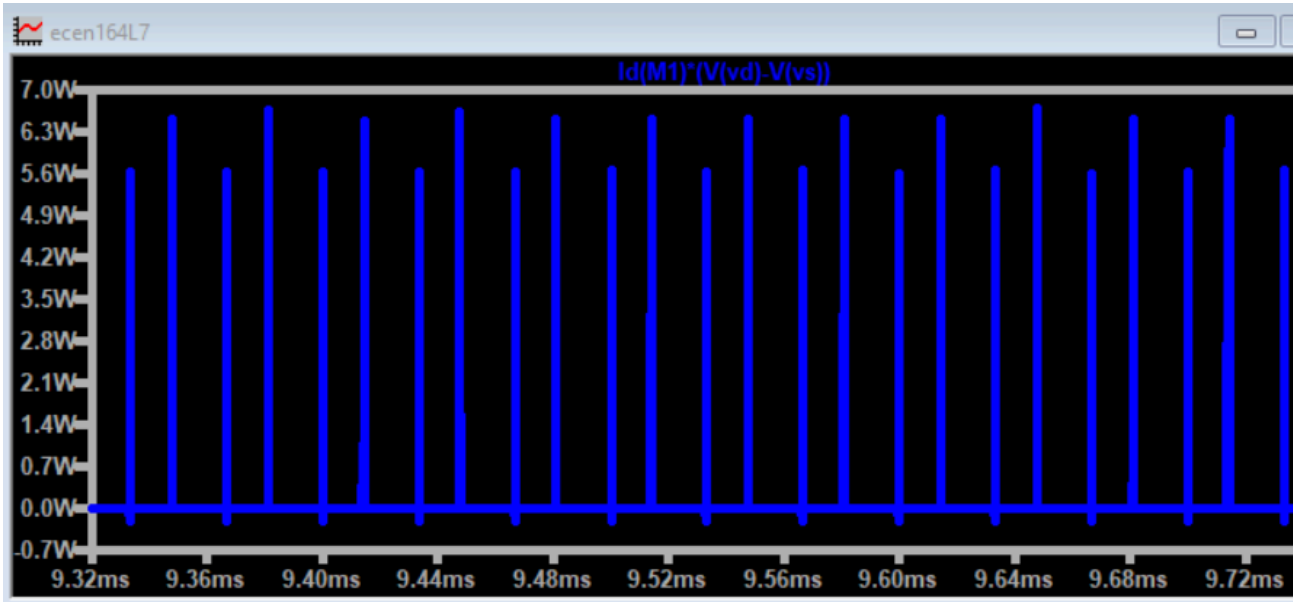

<u>Observations:</u>

- **What portion of the third graph is conduction loss? What portion is switching loss?**

The conduction loss is very small (near zero) and we get brief spikes for the switching losses.

- **What is the RDSon value of the MOSFET?**

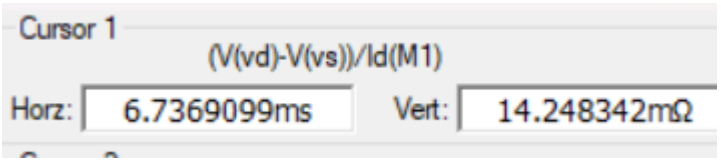

Plot the power across various components such as the diode.
You can use "ALT+Left Click" on the component you want to read power from (eg: input source for Pin)

- After plotting the power, use "CTRL+Left Click" on the waveform header to get the average power for each component.
- Find the power loss in each component in the system

Diode

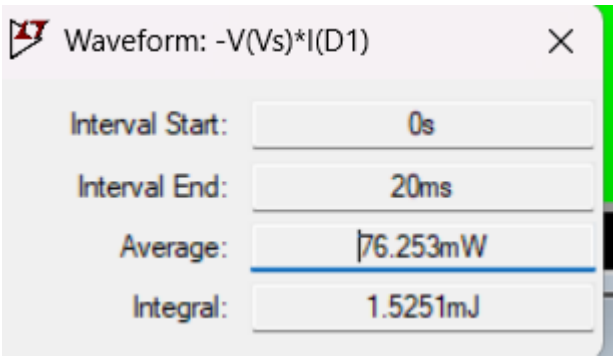

Mosfet:

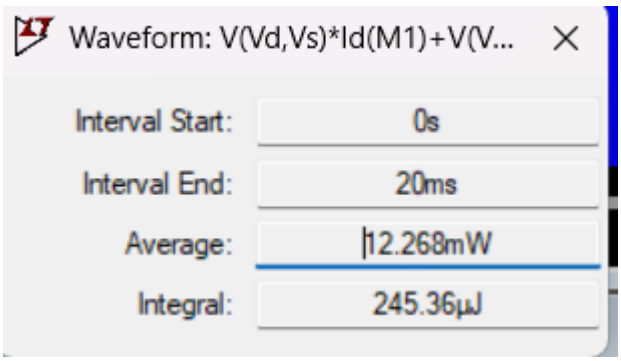

RS_HI

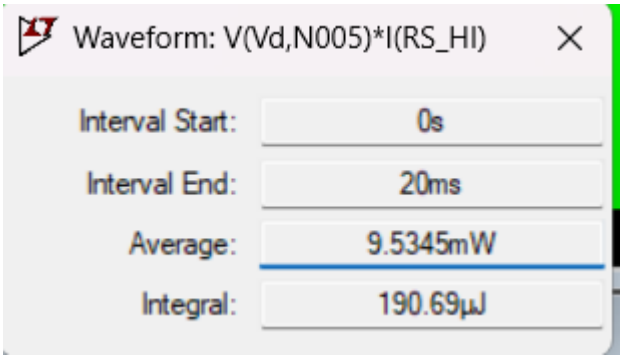

L1:

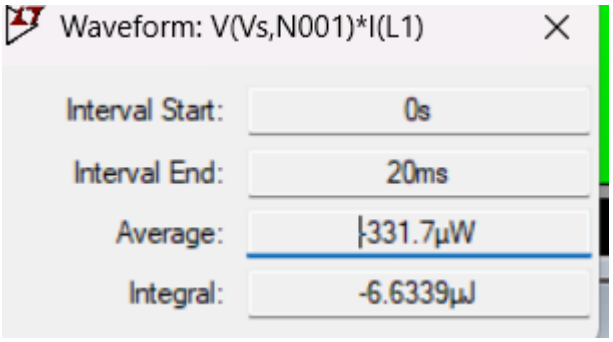

R_ESR:

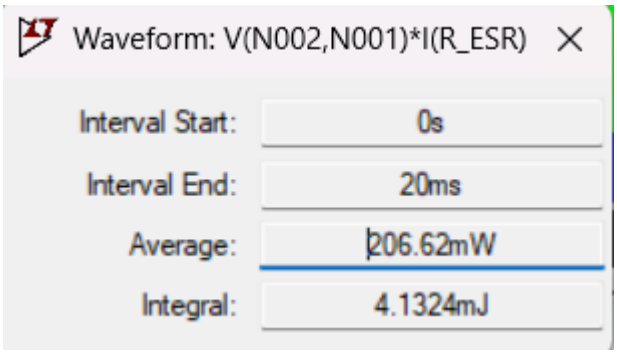

RS_LO:

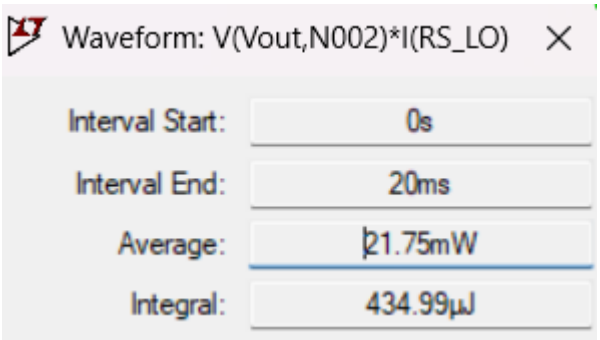

Cout:

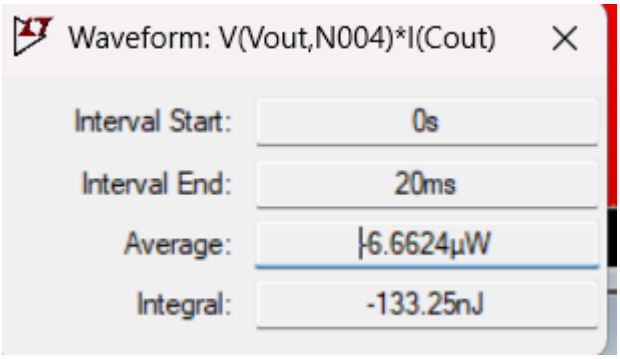

ESR:

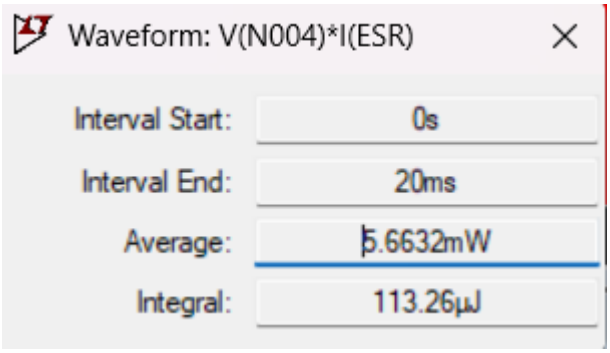

Vout:

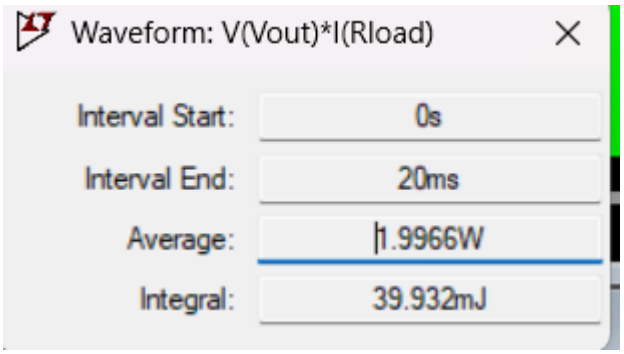

Vin:

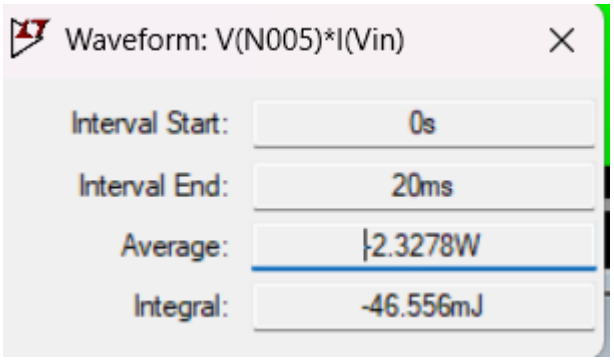

1.9966 + .33175 = 2.328

Observations:

- **What should the total power add up to? Pin = Pout + ? + ? + …**
- **Explain the various loss terms you have included.**

Accounting for all losses:
76.253+12.268+9.5345-.3317+206.62+21.75-.0066624+5.6632= 331.75mW
1.9966+ .33175 = 2.328 which is ~2.3278 (very close)

Do you see a change in output voltage compared to when your system was all ideal elements? Explain why or why not.

Yes I do because the components took some power and thus the voltage is lower.